STATEMENT OF JOHN E. WESLER, DIRECTOR, OFFICE OF ENVIRONMENT AND ENERGY, FEDERAL AVIATION ADMINISTRATION, BEFORE THE HOUSE COMMITTEE ON SCIENCE AND TECHNOLOGY, SUBCOMMITTEE ON TRANSPORTATION, AVIATION, AND MATERIALS, CONCERNING AIRCRAFT NOISE REDUCTION TECHNOLOGY, WEST PALM BEACH, FLORIDA, APRIL 1, 1985

Mr. Chairman and Members of the Subcommittee:

It is a pleasure to appear before you to discuss aviation noise reduction technology. We in the FAA take this subject very seriously. As you know, our primary job is the development and operation of a safe and efficient system of air transportation for our nation. And, while our primary emphasis must be placed on the achievement of the first of these objectives--the highest degree of air safety--the second objective is also vitally important, and receives great attention within the agency. We have a duty to develop and sustain an efficient system--one which permits aviation to exist and grow without unnecessary constraint.

As we look to the future needs of the air transportation system in the United States, we forecast that aircraft operations will grow by 62 percent from 1984 to 1996. Those aircraft operations involve departures and landings at airport runways; yet we do not foresee the number of airport runways growing by anything like that rate over the same period. As a matter of fact, we see the capacity improvements of the

existing runways being limited as more and more constraints are imposed--many of these constraints caused by noise! Therefore, we take the duty of controlling aviation noise quite seriously.

Congress first gave the FAA authority to control aircraft noise in 1968, through an amendment to the Federal Aviation Act which directed the FAA to establish standards and regulations necessary to control aircraft noise and sonic boom, in order to protect the public health and welfare. Among the factors which the Administrator must consider in issuing any such standards and regulations is whether they are technologically practicable. We interpret this to mean that the state-of-the-art in noise control engineering has been reasonably demonstrated to be not only feasible in terms of engineering, but also will be available for application to the equipment affected. Consequently, we are vitally interested in the research and development underway in aviation noise control.

Since 1968, the FAA has approached aviation noise control along three parallel paths. First, and most pertinent to this hearing, we have imposed noise standards on aircraft, to ensure that each is designed and fabricated with noise control as a consideration. Second, we make every effort to control the pattern of air traffic into and out of airports to

minimize noise impacts on the ground. By directing departures and arrivals over non-noise-sensitive areas wherever possible with respect to the highest level of air safety, we achieve a great deal of noise control. The third path includes airport noise compatibility planning and programs, in which the FAA provides both technical and financial assistance to local airport operators to assist in the planning and design of local noise control programs.

Taken together, the three basic approaches I have outlined are effective in the management and reduction of airport noise problems, though I must say that they do not eliminate those problems entirely, and the gains made at great cost in one area may be diminished by non-complementary actions in other areas. Because of the primary emphasis of this hearing, Mr. Chairman, I will concentrate my remarks on the actions of the FAA to reduce aviation noise at its source--the airplane. But I would like to repeat that source noise control is only one part of the overall program to reduce aviation noise.

In 1969, FAA first imposed noise standards on new civil aircraft designs. As a result of those initial noise standards, second-generation civil turbojet aircraft such as the Douglas DC-10 and the Lockheed L-1011 were significantly quieter than the first generation turbojet aircraft such as the Boeing 707 and Douglas DC-8 models. The next logical step in the application of noise control was the imposition of the same noise standards to new production aircraft in 1973.

After demonstrating that it was technologically practicable to include noise reduction features in older designs of transport category aircraft still in production, FAA extended the noise standards in Part 36 of the Federal Aviation Regulations to include new production airplanes. As a result, Boeing 727 and 737 and Douglas DC-9 aircraft manufactured since 1973 have been required to meet the 1969 noise standards.

The next step was taken in 1976, when the same noise standards were applied to all larger civil turbojet aircraft, including those designed before 1969 and manufactured before 1973. Again, the technological practicability of retrofitting those older aircraft had been demonstrated through the development of "quiet nacelles" and the actual testing of a modified Boeing 707. A period of 8 years was allowed for full compliance with this requirement. A compliance deadline of January 1, 1985, was imposed with earlier interim phased compliance deadlines for U. S. domestic operators.

The cycle of regulatory noise standards was begun again in 1977, when FAA amended Part 36 to increase the stringency of the standards for new aircraft designs such as the Boeing 757 and 767 and the McDonnell-Douglas MD-80. For simplicity, we designated the new, more stringent standards as "Stage 3" noise limits. "Stage 2" noise limits were those initially

adopted in 1969, and "Stage 1" aircraft were those which were unable to meet either of the noise standards. Using this shorthand, only Stage 2 aircraft received aircraft type design approval from 1969 to 1977, and since 1973, only aircraft which meet the Stage 2 standards have been produced. As of January 1, 1985, only aircraft which meet Stage 2 may operate in the United States without an exemption. Since 1977, only Stage 3 aircraft have been approved for new designs.

I have appended to my testimony several charts which illustrate the Part 36 noise standards. The first chart shows the locations of the three noise measurement points required by these standards. The next three charts illustrate the Stage 2 and Stage 3 noise limits at these three locations, and show the measured levels for representative modern aircraft. The fifth chart shows the substantial progress which has been made in reducing aircraft noise.

Along the way, FAA has also imposed noise standards on other types of aircraft, including small propeller-driven models and supersonic models. In all cases, we have worked closely through the International Civil Aviation Organization (ICAO) to seek international harmonization of these standards, in order to facilitate international commerce.

I should point out that, in each change to our noise standards, we have not depended solely on the currently

available noise control technology to meet those standards. We have expended a substantial amount of time, effort, and resources to create, develop, and demonstrate the feasibility of improved noise abatement technology. Without improved available technology, more stringent noise standards are meaningless. Clearly, it would be useless to require quieter aircraft if their practical design and operation were not possible.

In past years, FAA has sponsored research and development in aircraft noise control in support of its rulemaking, most often in cooperation and coordination with the National Aeronautics and Space Administration. For example, the availability of "quiet nacelles" was the direct result of earlier research and development by NASA, in cooperation with the aviation engine and airframe industry. Actual demonstration of the airworthiness and noise performance of those modifications was then sponsored by FAA, forming the basis for rulemaking.

We continue this process today, Mr. Chairman. FAA is about to propose noise standards for civil helicopters, following several years of developing the bases for such standards and conducting our own testing to assure that the procedures are practical and the limits are reasonable. Many of these bases have come from the FAA/NASA/Industry National Rotorcraft Noise Reduction Program, in which NASA and the helicopter

manufacturers have jointly conducted research into the basic mechanisms of rotorcraft noise generation and the technology for controlling and reducing that noise. Our proposed standards will be based on that work.

FAA continues to examine the state-of-the-art in aviation noise control technology to determine if further amendments to our noise standards are appropriate. The next logical steps in regulating aircraft noise would follow the cyclical pattern already established. We are currently examining whether an amendment to Part 36 which would require all new production of turbojet aircraft to meet Stage 3 noise limits after a fixed date may be an appropriate proposal. Currently, with only a few exceptions, commercial and private jets now in production meet the more stringent Stage 3 noise limits. With some improvement in certain sizes of aircraft engines, it may be reasonable to require all new jet aircraft to comply with that standard after some future date. Stage 3 noise standards, in our judgment, represent the best state-of-the-art in noise control now available. Of course we are always ready for new technologies which may arise, or research and development which may show some promise for future technological innovations which can improve aircraft noise control.

Certainly, if all civil aircraft now operating into our airports complied with Stage 3 noise limits, airport noise problems would be greatly reduced. But there are practical

problems associated with such a proposal. There are approximately 2,900 larger commercial airplanes now in use by U. S. air carriers, and over 100 in use by private operators. Of these, approximately 350 were designed for and meet the Stage 3 noise limits. Perhaps 200 more in current use could meet that standard with minimal modifications or weight limitations. This leaves on the order of 2,350 larger aircraft which would have to be retired completely from U. S. service and replaced by new models or re-engined, since the use of "quiet nacelles" or "hush kits" cannot reach Stage 3 noise performance. The only aircraft currently being re-engined are the Douglas DC-8-60 series, which comfortably meet the Stage 3 noise standards with new engines. Many of the existing Stage 2 aircraft are relatively new and have a great deal of useful life left. Consequently, the reasonableness of such a major replacement or re-engining program is obviously one which requires a great deal of study and discussion.

In summary, Mr. Chairman, FAA is vitally concerned about aviation noise and the constraints which it can place on our national system of air transportation. Aircraft noise levels are decreasing around our airports, and the reductions in the noise levels of individual aircraft are striking. Current production aircraft are incorporating the best available noise reduction technology, and airport noise levels will continue

to decrease as more and more of these new aircraft come into use. Nevertheless, continued research and development in aircraft noise technology is vital, if we are to continue to reduce aviation noise. As an agency which promotes improvements in technology and then uses them as the basis for regulatory actions in fulfillment of our statutory duty in the noise control area, we look forward to further advances in aircraft noise reduction.

That completes my prepared statement, Mr. Chairman. At this time, I would be pleased to respond to your questions.

NOISE MEASURING POINTS FOR AIRPLANE TYPE CERTIFICATION

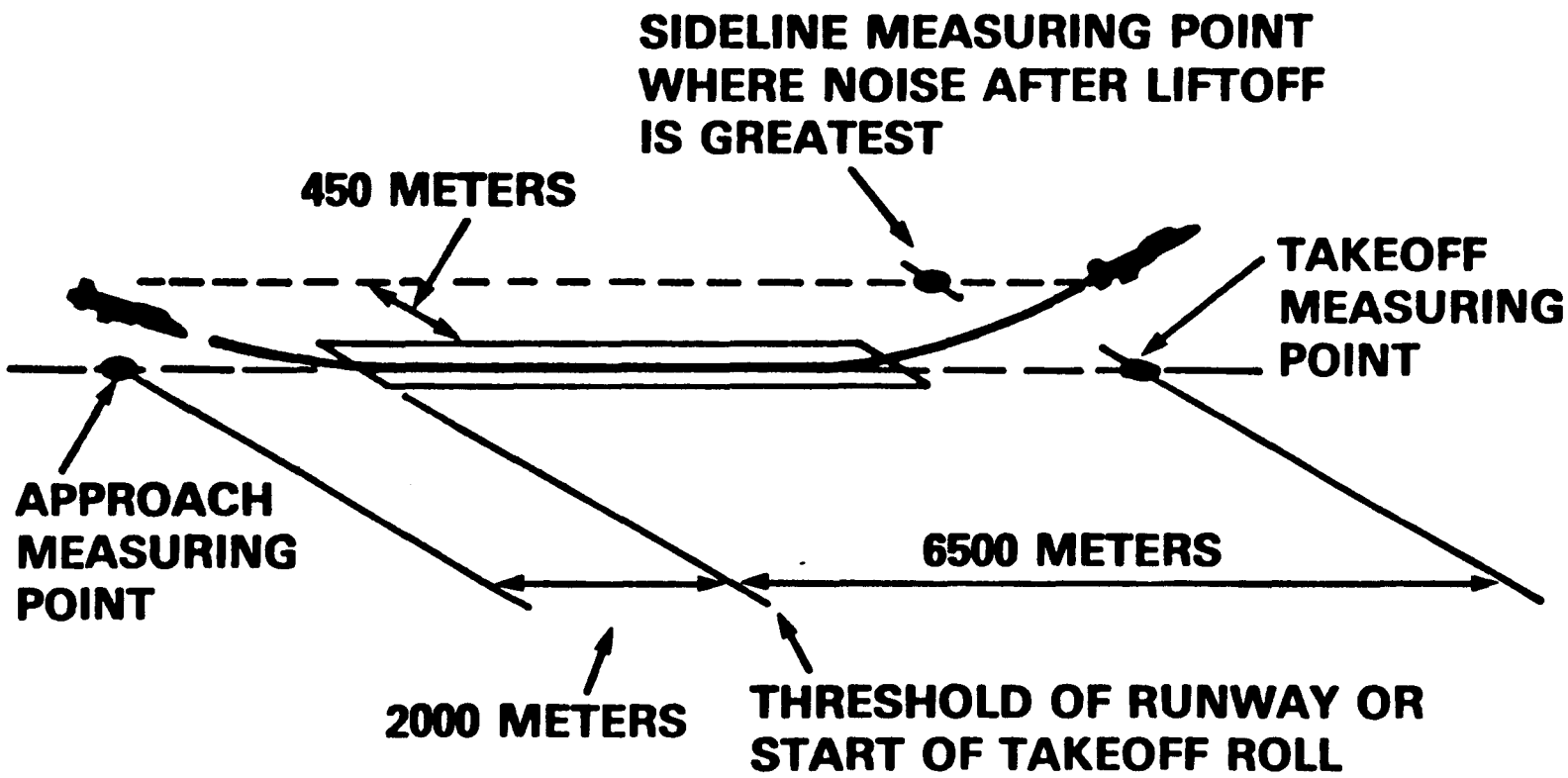

CERTIFICATED VALUES

APPROACH NOISE LEVELS

2000 METERS FROM RUNWAY THRESHOLD

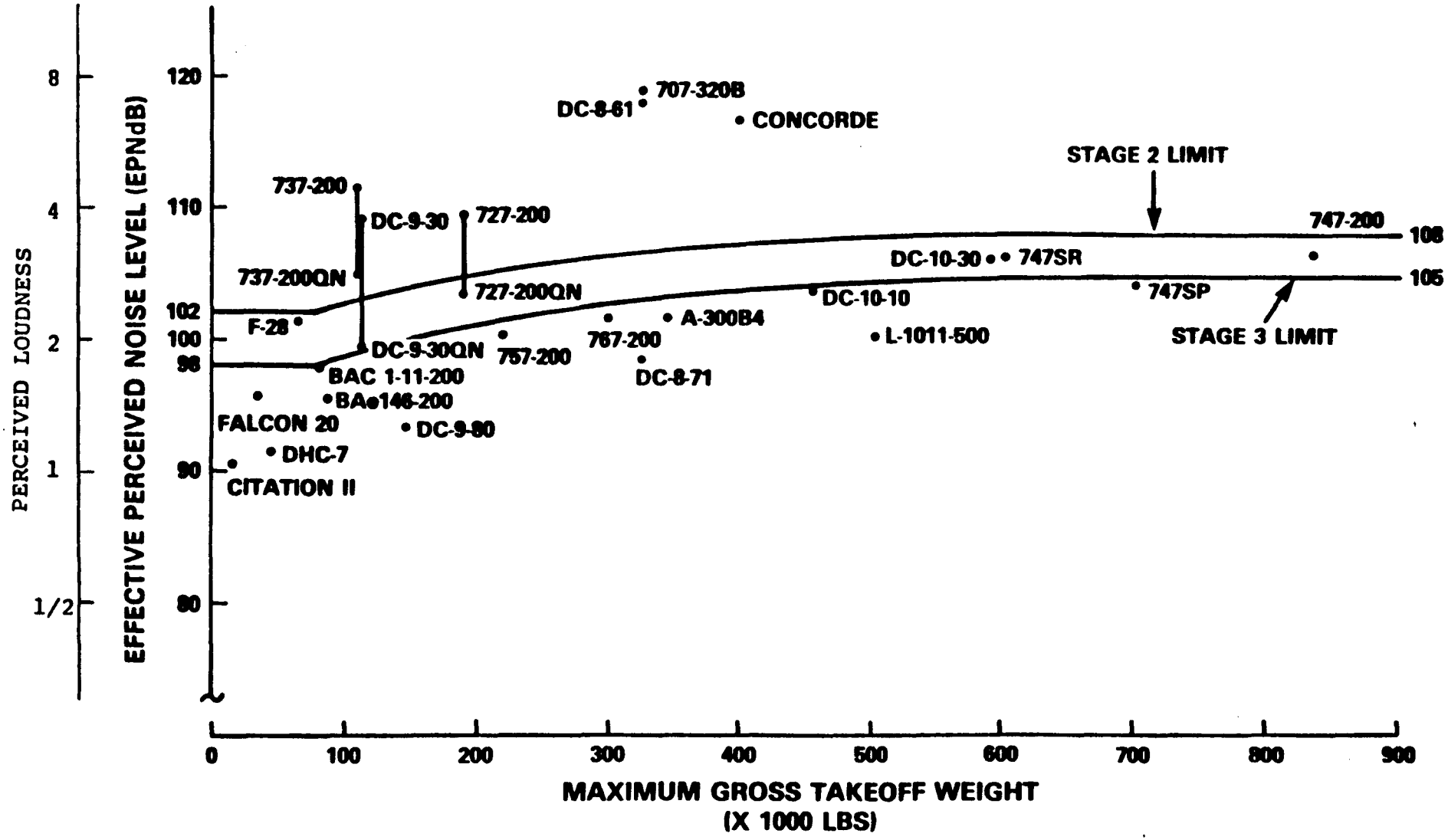

CERTIFICATED VALUES

SIDELINE NOISE LEVELS

450 METERS FROM RUNWAY CENTERLINE

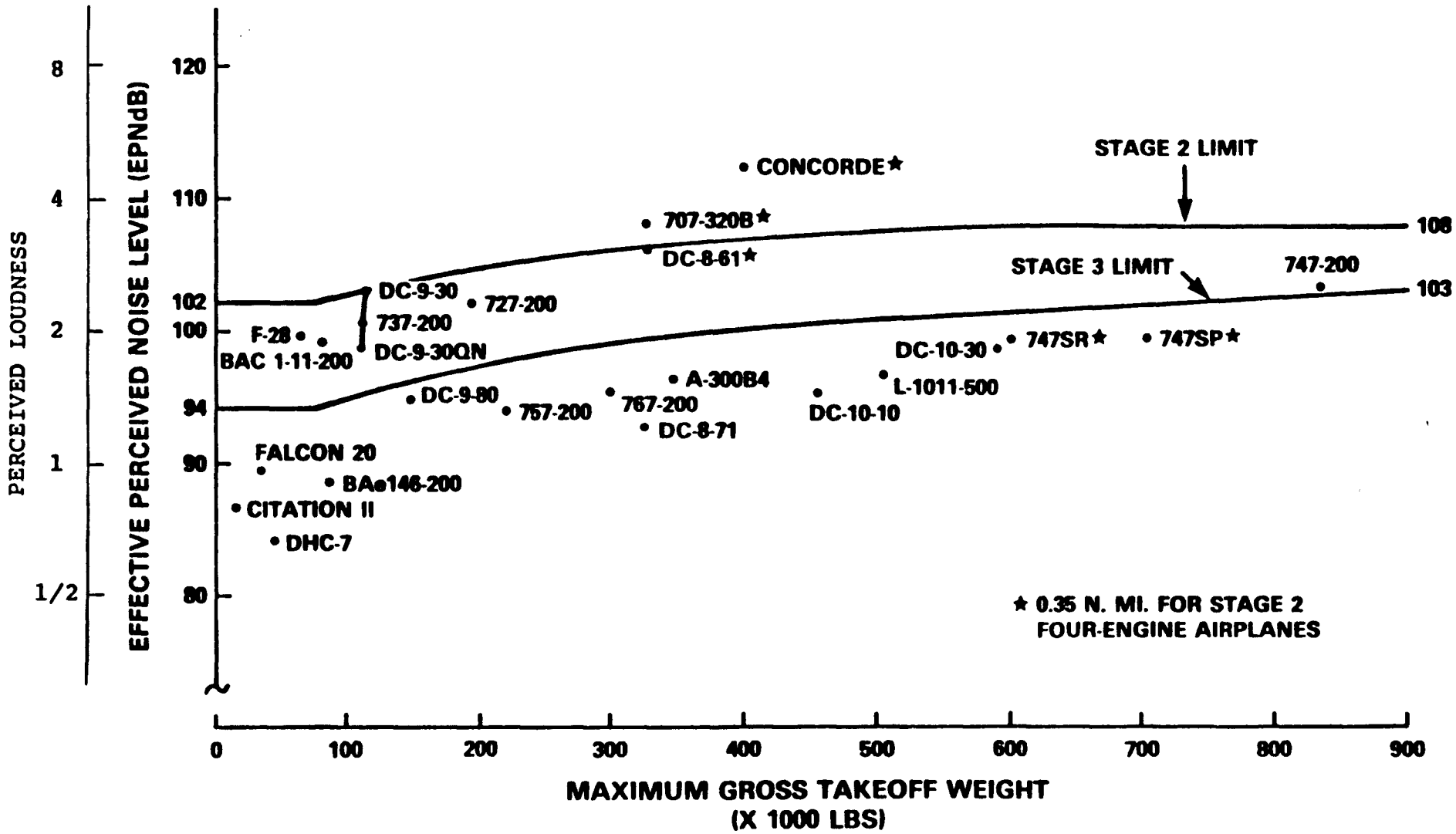

CERTIFICATED VALUES

TAKEOFF NOISE LEVELS

6500 METERS FROM BRAKE RELEASE

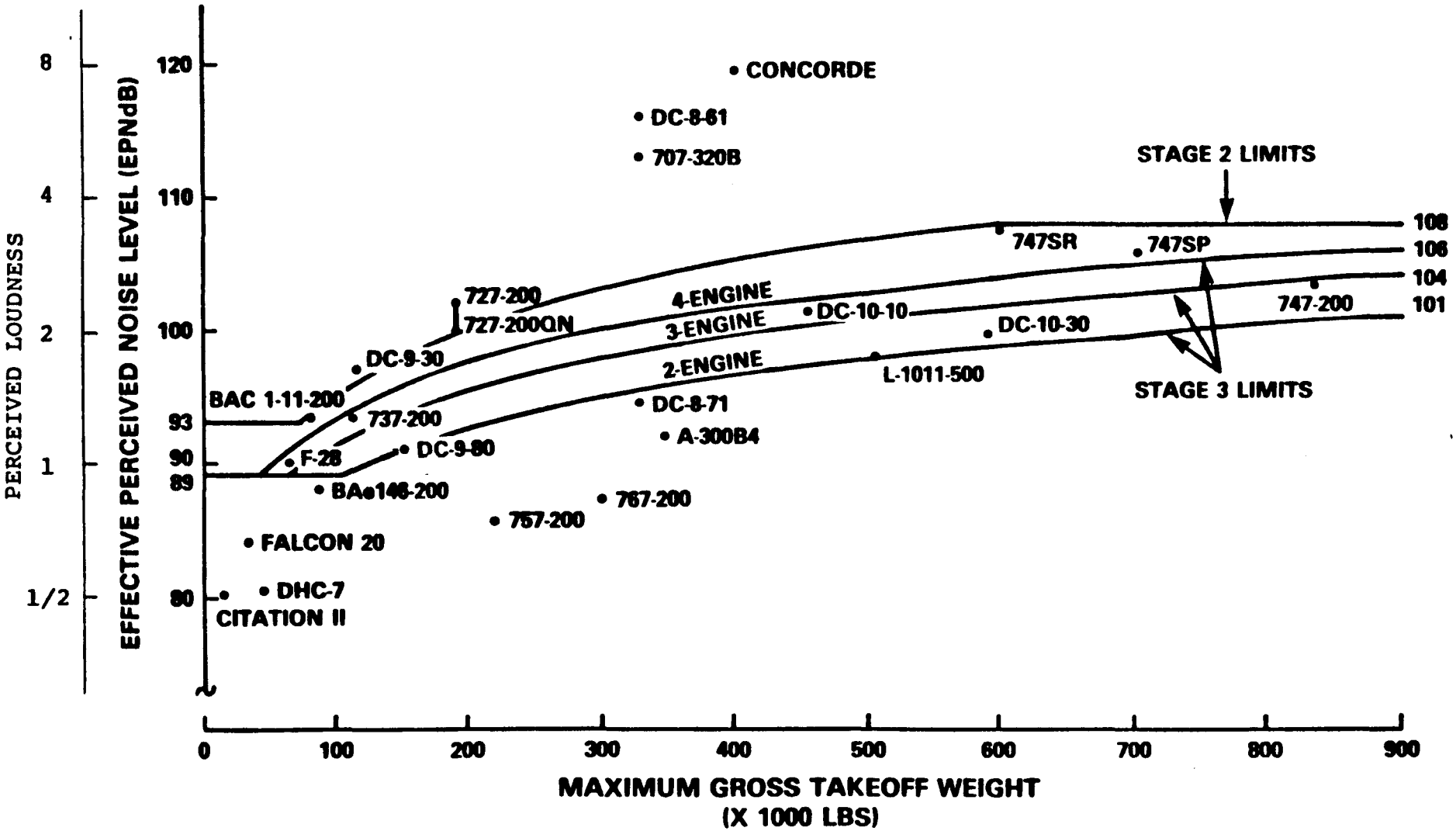
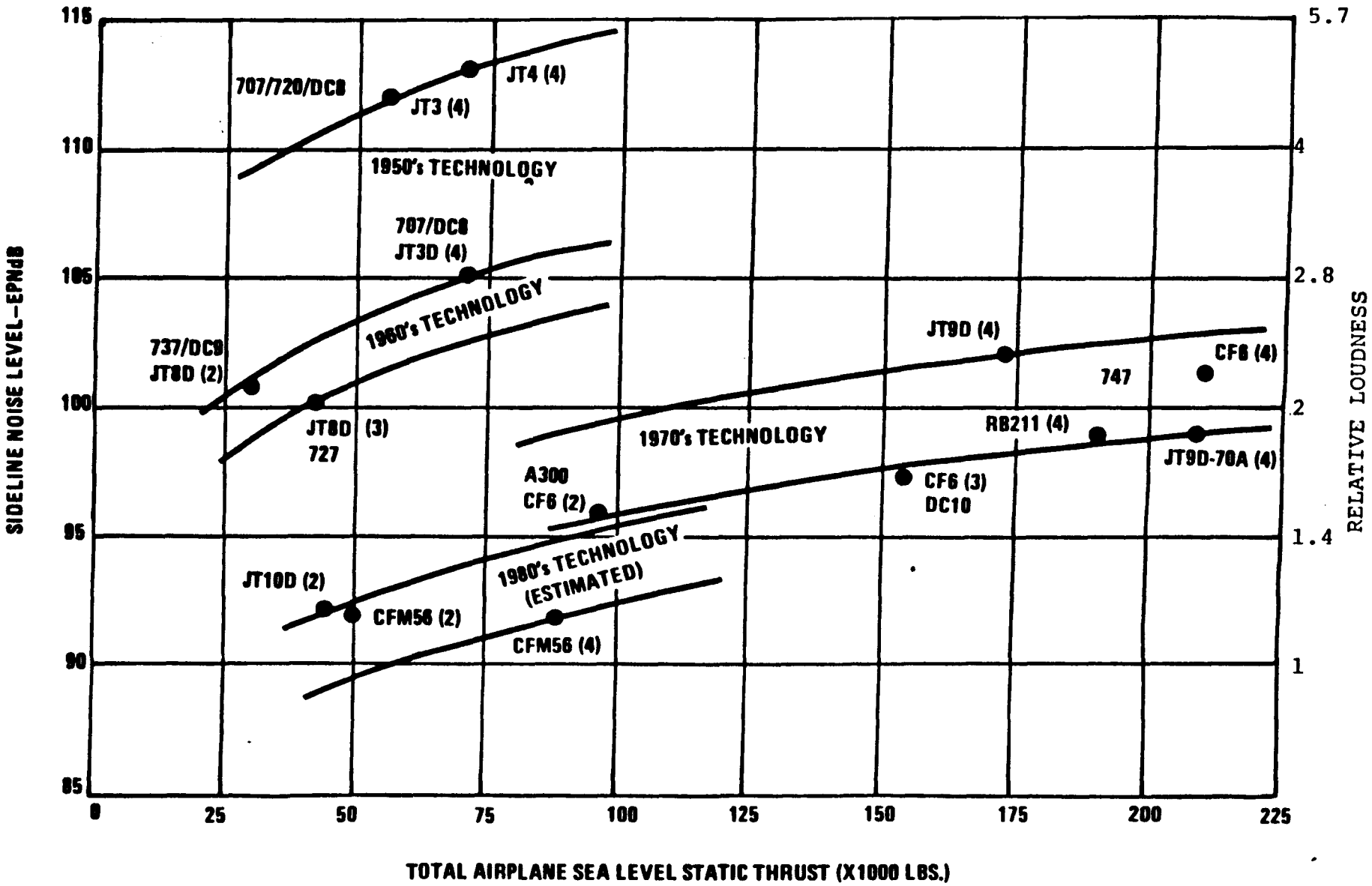
Engine/Aircraft Noise History